Naturalized Detention Practices

Detention basins are constructed depressions, with discharge sufficiently restricted to store stormwater, and gradually release it to the downstream drainage system. Control of stormwater discharge rates from new development has been required since the early 1980s in many parts of the Great Lakes region and detention basins have been used in the vast majority of cases to meet this requirement.

The earliest detention basins were dry bottom basins that completely drained between events. The basins were typically vegetated with turf grass and designed to control only the largest events to prevent flooding. Beginning in the middle 1990's detention basins began to be designed as wet ponds or shallow wetlands to improve pollutant removal performance and that practice continues today, as required by Federal, State, and local requirements. Simultaneously, the allowable stormwater release rate from urban developments has been reduced over the years in an attempt to mitigate both runoff volume and rate increases. As a result, detention times have increased and it has become increasingly difficult to prevent dry, turf bottom detention basins from becoming very muddy and unusable, as active recreational space. Due to the wet conditions and the need to provide water quality benefits, modern detention basins are typically designed as wet ponds or as shallow wetland basins, with vegetation that is suited to the wet conditions. The vegetation is maintained in a naturalized fashion and is usually comprised of native herbaceous plants from habitats that have growing conditions similar to those of the detention basin. Herbaceous plants consist of flowering perennials, grasses, and grass-like plants that have soft vascular structures which die back each winter, as opposed to woody plants that have persistent above-ground trunks and branches.

Detention basins rely primarily on settling to remove pollutants. However, additional removal can occur via biologic uptake and transformation by aquatic organisms and wetland vegetation. Settling efficiency and biologic uptake and transformation are dependent on the amount of time that runoff resides in the basin (also known as residence time). Wet ponds and shallow marsh basins increase the runoff residence time from the short period of the event to the extended period between events, and are therefore much more effective at pollutant removal than dry turf bottom basins.

Many jurisdictions in the Great Lakes region require control of large events to protect against flooding, as well as for more moderate sized events to protect against accelerated stream bank erosion and "flashy" hydrology that can impair stream, lake, and wetland ecology.

Bio-Retention Practices

- Wet-Bottom Detention Ponds
- Shallow Marsh Basins
- Dry Bottom Detention
- Typical Locations
- Downstream
- Subdivisions
- Campuses and Parks

Customization Options

Detention basins are relatively large facilities that occupy significant land area and therefore are best suited for larger developments located in suburban and rural areas where there is adequate space. In some cases, detention basins can be integrated into parks and other open space to provide passive and active recreational opportunities, in addition to stormwater management. In many larger developments, detention basins are designed as landscape features that act as both visual and recreational amenities, particularly when combined with trails, outlooks, boardwalks, and other features.

Where dry bottom detention basins may be desired to provide active recreational space, surface detention can be combined with upstream green infrastructure practices to meet water quality and runoff volume control requirements. The upstream green infrastructure will typically reduce the volume and frequency of runoff reaching the surface detention basin and therefore better support active use turf areas. Upstream green infrastructure will also improve the quality of runoff discharging to detention ponds, reducing the potential for algae blooms or other conditions in detention ponds that can sometimes be considered objectionable by residents.

Detention basins can often be located and designed as regional facilities, serving multiple developments (or multiple phases of a planned development) to improve space efficiency, and allow for larger ponds or basins that can serve as regional amenities. When the tributary developments are new, they should typically include on-site green infrastructure to improve the quality of runoff entering the regional basin, and to potentially reduce the size of stormwater conveyance infrastructure between the development and the detention basin.

For categorization purposes, there are three detention basin configurations as described below. However, there are infinite variations of basins that can be designed to include aspects and components of these three basic types.

Wet Bottom Detention Ponds

Detention ponds have a permanent pool of open water that is typically four to six feet deep or greater below the outlet structure. Historically, many detention ponds were vegetated with turf side slopes down to the water's edge or to a rip rap edge. Naturalized basins should include flat slopes around the perimeter of the pond to support emergent wetland vegetation that will provide aquatic and terrestrial habitat and improve water quality. Large ponds may also include islands and other features to increase visual and habitat diversity.

Shallow Marsh Basins

Shallow marsh detention basins feature a shallow depression below the outlet structure such that the bottom area is fully vegetated with emergent vegetation. The residence time is less with shallow marsh basins than with ponds, and therefore fewer pollutants are removed through settling. Greater interaction between runoff and native plants and their root systems increases the potential for biological uptake of nutrients.

Dry Bottom Detention

Dry bottom basins either have a flat bottom or positive slope along their floor leading to the outlet structure which results in much drier soils between rain events. They can be naturalized with native plants, like wet bottom and marsh basins are, though these plants will come from drier, mesic soil environments. Turf grass can also be used in dry bottom basins. Basins with turf grass will need minimum bottom slopes of 2% toward the outlet structure to ensure adequate drainage between events. Dry bottom basins with turf alone cannot meet the water quality and/or retention requirements of most stormwater ordinances, and therefore must be paired with upstream or downstream green infrastructure. Dry bottom basins with only turf provide little water quality benefit and are therefore not the focus of this document.

Maintenance

Inspection and maintenance activities for naturalized detention basins should focus on vegetative management, erosion repair, and sediment and debris removal. Inspection and maintenance activities will be most intensive during the first one to three years and can typically be reduced once initial design and construction issues are addressed and vegetation is established.

The outlet structure of detention basins should be inspected for debris that may be obstructing the outlet control orifice or weir. Detention basins should also be inspected to identify significant erosion at inlet structures, along the shoreline of wet ponds, and between the inlet and outlet of dry basins. Erosion potential is greatest prior to full vegetation establishment, but will continue through the life of the basin.

Detention basins should also be inspected for sedimentation that is most likely to occur near inlets to the basin. The rate of sediment accumulation may be significant if the tributary area is not stabilized and proper sediment control is not provided. Once the tributary area is stabilized the rate of sediment accumulation should slow. During the first year, the detention basin should be inspected monthly and after significant rainfall events that could cause erosion. After the first year and after issues have been resolved, annual inspection should be adequate.

Intensive landscape maintenance should occur during the first three years to ensure proper establishment of the landscape. Seeded landscapes may take up to five years to establish. At the end of the establishment period and in perpetuity after that, annual vegetative maintenance should occur. Annual prescribed burning is the preferred long term vegetative maintenance strategy for native grass-dominated landscapes. Mowing may be an alternative for areas where prescribed burn is not feasible. During the first year before the soil is fully stabilized, repair of gully erosion and scour holes may be necessary at points of concentrated inflow.

Cost Information

Cost information is provided for each green infrastructure technique in Section 5 of this report. The installed costs are based on project experience, bid tabs, and information from the RS Means trends, and the labor and bidding environment.

Table 7: Naturalized detention practices unit costs[1]

	Item	Description	Unit Price	Unit
GI Technique	Naturalized detention basin	Design/Engineering	15% of Construction Cost	LS
		Mobilization	$10,000.00	LS
		Excavation & Haul	$45.00	CY
		Grading	$12.00	SY
		Topsoil (6")	$25.00	CY
		Erosion Control Blanket	$3.00	SY
Required Component	Native Plantings	Seeding	$0.50	SF
		Plugs (12" on center)	$5.00	EA
		Gallons (36" on center)	$15.00	EA
	Inlet Protection	Rip Rap	$500.00	EA
	Outlet Control Structure	48" Manhole with Outlet Control	$2,800.00	EA
	Storm Sewer	12" HDPE storm sewer	$65.00	LF
	Connection to existing manhole		$600.00	EA
Custom Options	Impermeable Liner		$0.00	SF

1 Installed cost include material and labor based on bid tabs from related projects and RS Means.

Specifications

Specifications are an important component in the design of green infrastructure. Along with the construction documents, the design engineer should modify the following Illinois Urban Manual specifications for the specific conditions present at the site. Other sections can be included on an as-needed basis.

Construction Specifications

2 - Clearing and Grubbing
5 - Pollution Control
6 - Seeding, Sprigging and Mulching
7 - Construction Surveys
8 - Mobilization and Demobilization
21 - Excavation
23 - Earthfill
25 - Rockfill
26 - Topsoiling
44 - Corrugated Polyethylene Tubing

Wet Bottom Detention Pond

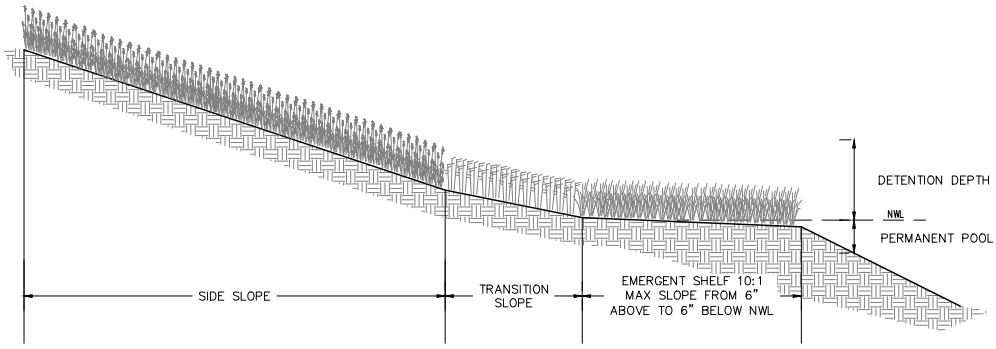

WET BOTTOM DETENTION POND SECTION

DESIGN GUIDANCE – WET DETENTION PONDS

TYPICAL LOCATION: WITHIN OPEN SPACE AREAS OF RESIDENTIAL, COMMERCIAL, AND INSTITUTIONAL DEVELOPMENTS. REGIONAL DETENTION CAN BE LOCATED WITHIN PARKS AND OTHER OPEN SPACE

PERMANENT POOL: THE PERMANENT POOL DEPTH SHOULD BE A MINIMUM OF 4 – 6 FEET DEEP TO MINIMIZE RESUSPENSION OF BOTTOM SEDIMENTS AND MAINTAIN OPEN WATER CONDITIONS. THE POOL DEPTH SHOULD BE INCREASED TO TEN FEET TO SUPPORT FISH.

SIDE SLOPES: AT THE SHORELINE, SLOPES SHOULD BE 5:1 TO 10:1 OR FLATTER TO DISSIPATE WAVE ENERGY AND TO SUPPORT EMERGENT VEGETATION. APPROXIMATELY ONE FOOT ABOVE THE SHORELINE, THE SLOPE MAY BE INCREASED BUT TYPICALLY SHOULD NOT EXCEED 4:1 TO FACILITATE VEGETATIVE MANAGEMENT AND MAINTAIN BANK STABILITY.

SAFETY SHELF: MANY JURISDICTIONS REQUIRE A SAFETY SHELF BE PROVIDED WITHIN THE POND. A SHALLOW EMERGENT SHELF AT THE SHORELINE CAN SERVE AS A SAFETY SHELF.

SHORELINE EROSION PROTECTION: SHORELINES SHOULD BE PROTECTED FROM EROSION CAUSED BY WAVE ACTION AND WATER LEVEL FLUCTUATIONS. WHERE SHALLOW SHORELINE SLOPES ARE NOT PROVIDED, RIP RAP OR OTHER ARMORING SHOULD BE PROVIDED.

INLET PROTECTION: ARMORING SHOULD BE PROVIDED AT STORM SEWER INLETS TO PREVENT SCOUR BY HIGH VELOCITY FLOW ENTERING THE BASIN.

DETENTION DEPTH: THE DEPTH OF THE BASIN WILL BE DETERMINED BY THE REQUIRED DETENTION STORAGE VOLUME AND THE AREA OF THE BASIN. IT IS RECOMMENDED THAT THE DEPTH AT HIGH WATER LEVEL NOT EXCEED THREE FEET TO MINIMIZE NEGATIVE VEGETATION IMPACTS.

VEGETATION: NATIVE EMERGENT VEGETATION TOLERANT OF WATER LEVEL FLUCTUATIONS SHOULD BE PROVIDED ON THE EMERGENT SHELF. NATIVE HERBACEOUS VEGETATION SUITED TO WET–MESIC SOIL CONDITIONS SHOULD BE PLANTED BETWEEN THE SHORELINE AND THE HIGH WATER ELEVATION.

DETAILED DESIGN PRELIMINARY WORKSHEET

☐ 2–YEAR RELEASE RATE	_____	CFS
100–YEAR RELEASE RATE	_____	CFS
☐ PROVIDED DETENTION STORAGE	_____	CF
☐ NORMAL WATER LEVEL	_____	FT
☐ HIGH WATER LEVEL	_____	FT
☐ PERMANENT POOL DEPTH	_____	IN
☐ SIDE SLOPES	_____	H:V
☐ AQUATIC SHELF?	_____	Y/N

1. COMMENTS

GI 4.01
SCALE: NTS

WET BOTTOM DETENTION POND

A COLLABORATION OF:

Shallow Marsh and Dry Bottom Detention Basin

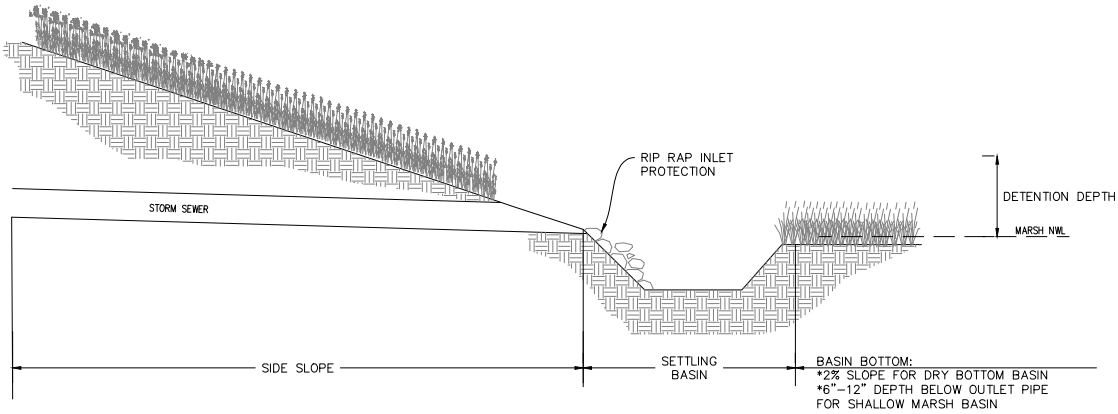

SHALLOW MARSH AND DRY BOTTOM DETENTION SECTION

DESIGN GUIDANCE – SHALLOW MARSH AND DRY BOTTOM DETENTION

TYPICAL LOCATION: WITHIN OPEN SPACE AREAS OF RESIDENTIAL, COMMERCIAL, AND INSTITUTIONAL DEVELOPMENTS. REGIONAL DETENTION CAN BE LOCATED WITHIN PARKS AND OTHER OPEN SPACE

PERMANENT POOL: TO SUPPORT EMERGENT VEGETATION, THE PERMANENT POOL SHOULD NOT BE MORE THAN 6 – 12 INCHES DEEP. FOR DRY BOTTOM BASINS, THERE SHOULD BE NO PERMANENT POOL

SIDE SLOPES: SIDE SLOPES TYPICALLY SHOULD NOT EXCEED 4:1 TO FACILITATE VEGETATIVE MANAGEMENT AND MAINTAIN BANK STABILITY. NEAR THE BOTTOM OF THE BASIN, THE SLOPE SHOULD FLATTEN TO 5:1 OR 10: TO PROVIDE A SMOOTH TRANSITION FROM DRIER TO WETTER PLANT SPECIES.

INLET PROTECTION: SETTLING BASINS ARE RECOMMENDED AT EACH INLET TO PROVIDE ENERGY DISSIPATION AND SEDIMENT TRAPPING IN AN EASILY MAINTAINABLE LOCATION. THIS WILL ALSO REDUCE POTENTIAL SEDIMENT–INDUCED VEGETATION SMOTHERING IN THE BASIN. ARMORING SHOULD ALSO BE PROVIDED AT STORM SEWER INLETS TO PREVENT SCOUR BY HIGH VELOCITY FLOW ENTERING THE BASIN.

DEPTH: THE DEPTH OF THE BASIN WILL BE DETERMINED BY THE REQUIRED DETENTION STORAGE VOLUME AND THE DETENTION AREA OF THE BASIN. IT IS RECOMMENDED THAT THE DEPTH AT HIGH WATER LEVEL NOT EXCEED THREE FEET TO MINIMIZE NEGATIVE VEGETATION IMPACTS.

VEGETATION: NATIVE EMERGENT VEGETATION TOLERANT OF WATER LEVEL FLUCTUATIONS SHOULD BE PROVIDED ON THE BASIN FLOOR. NATIVE HERBACEOUS VEGETATION SUITED TO WET–MESIC SOIL CONDITIONS SHOULD BE PLANTED BETWEEN THE SHORELINE AND THE HIGH WATER ELEVATION.

GROUNDWATER INTERACTION: THE NORMAL WATER LEVEL (THE INVERT OF THE OUTLET CONTROL ORIFICE OR WEIR) SHOULD BE LOCATED ABOVE THE ORDINARY HIGH GROUNDWATER LEVEL TO AVOID CONTINUOUS FLOW THROUGH THE BASIN THAT WILL REDUCE RESIDENCE TIME AND WATER QUALITY PERFORMANCE.

DETAILED DESIGN PRELIMINARY WORKSHEET

- ☐ 2–YEAR RELEASE RATE _____ CFS
  100–YEAR RELEASE RATE _____ CFS
- ☐ PROVIDED DETENTION STORAGE _____ CF
- ☐ NORMAL WATER LEVEL _____ FT
- ☐ HIGH WATER LEVEL _____ FT
- ☐ PERMANENT POOL DEPTH _____ IN
- ☐ SIDE SLOPES _____ H:V

GI 4.02
SCALE: NTS

SHALLOW MARSH AND DRY BOTTOM DETENTION BASIN

A COLLABORATION OF:

Naturalized Detention Planting

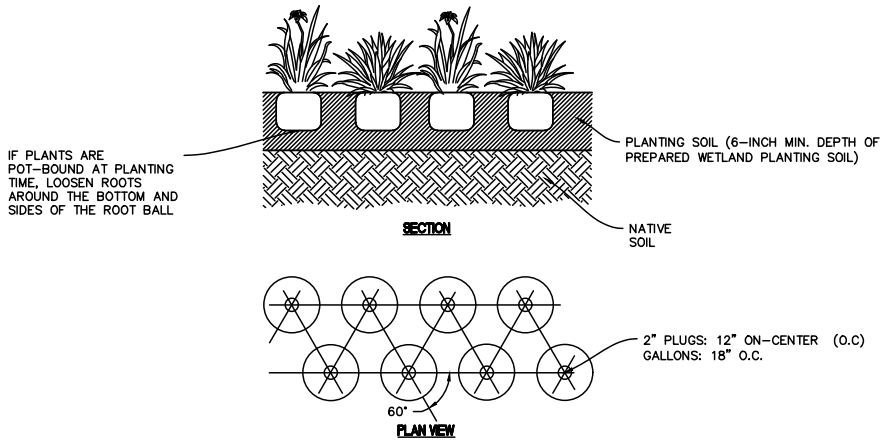

NATIVE PLANTINGS PLUG DETAIL

MIX	BOTANICAL NAME	COMMON NAME	RECOMMENDED PLANTING METHOD	NATIVE TO MIDWEST	MOISTURE
2/3	**GRASSES, SEDGES, RUSHES**				
	Carex annectens (Carex brachyglossa)	Yellowfruit Sedge, Small Yellow Fox Sedge	PLUG	YES	MESIC - 6" EMERGENT
	Carex comosa	Bristly Sedge, Bottlebrush Sedge	PLUG	YES	WET - 6" EMERGENT
	Carex cristatella	Crested Oval Sedge	PLUG	YES	MESIC - 6" EMERGENT
	Carex hystericina	Bottlebrush Sedge, Porcupine Sedge	PLUG	YES	MESIC - 6" EMERGENT
	Carex vulpinoidea	Brown Fox Sedge	PLUG	YES	MESIC - 6" EMERGENT
	Glyceria grandis	American Manna Grass, Reed Manna Grass	PLUG	YES	WET - 6" EMERGENT
	Juncus effusus	Sof Rush	PLUG	YES	WET - 6" EMERGENT
	Juncus torreyi	Torrey's Rush	PLUG	YES	MESIC - 6" EMERGENT
	Leersia oryzoides	Rice Cut Grass	PLUG	YES	WET - 6" EMERGENT
	Schoenoplectus tabernaemontani	Soft-stem Bulrush	PLUG	YES	WET - 12" EMERGENT
	Scirpus atrovirens	Dark Green Bulrush	PLUG	YES	WET - 12" EMERGENT
	Scirpus cyperinus	Wool Grass	PLUG	YES	WET - 6" EMERGENT
1/3	**FORBS**	Common Water Plantain	BARE ROOT	YES	
	Alisma subcordatum	Common Water Plantain	BARE ROOT	YES	0" - 12" EMERGENT
	Iris virginica var. shrevii	Blue Flag Iris	BARE ROOT	YES	WET - 6" EMERGENT
	Pontedaria cordata	Pickerel Weed	BARE ROOT	YES	0" - 6" EMERGENT

SUGGESTED NATIVE PLANTING SPECIES AND MIX[1,2]

NATIVE PLANT INSTALLATION: EMERGENT PLANT SIZE SHOULD BE CHOSEN SO THAT TWO-THIRDS OF THE VEGETATION REMAINS ABOVE WATER AFTER PLANTING. EMERGENT PLANTS ARE OFTEN INSTALLED IN SUMMER AFTER SEASONALLY HIGH WATER LEVELS HAVE PASSED. FENCING AND GOOSE FOILS SHOULD BE INSTALLED TO PROTECT PLANTS FROM BROWSING.

1. REFER TO PLANT SELECTION SECTION OF THIS GUIDE FOR FURTHER ADVICE ON SELECTING AN APPROPRIATE PLANT MIX.
2. THIS PLANT MIX ASSUMES A NATURALIZED PLANTING FOR A SITE WITH FULL SUN, 0" TO 6" EMERGENT CONDITIONS, NEUTRAL PH, AND MEDIUM FLOOD DURATION.

GI 4.03
SCALE: NTS

NATURALIZED DETENTION PLANTING

A COLLABORATION OF:

delta institute

ECT Environmental Consulting & Technology, Inc.

Naturalized Detention Notes

NATURALIZED DETENTION NOTES

SITE PREPARATION AND PROTECTION

1. WHEN THE VEGETATED AREAS ARE LOCATED ON COMPACTED SOILS OR AREAS OF FILL, THE SURFACE SHOULD BE RIPPED TO A MINIMUM DEPTH OF 6 INCHES, RAKED TO A SMOOTH AND EVEN SURFACE, AND LIGHTLY COMPACTED TO SUPPORT FOOT TRAFFIC.
2. THE PREPARED DETENTION BASIN SHOULD BE PROTECTED FROM CONSTRUCTION SITE TRAFFIC TO AVOID SOIL COMPACTION
3. DURING CONSTRUCTION, THE DETENTION BASIN SHOULD BE PROTECTED FROM UNFILTERED CONSTRUCTION SITE RUNOFF THAT COULD CLOG THE SOIL SURFACE AND PREVENT VEGETATION ESTABLISHMENT.
4. IF THE DETENTION BASIN IS TO BE USED AS A SEDIMENT BASIN DURING CONSTRUCTION, SOFT, FINE SEDIMENT THAT IS READILY RESUSPENDED WHEN SATURATED SHOULD BE REMOVED PRIOR TO FINAL GRADING.

VEGETATION ESTABLISHMENT AND MANAGEMENT

1. THE ENTIRE BASIN SHOULD BE STABILIZED WITH EROSION CONTROL BLANKET. SEED SHOULD BE APPLIED PRIOR TO PLACEMENT OF THE BLANKET. PLUGS SHOULD BE PLANTED THROUGH THE BLANKET.
2. AREAS OF THE BASIN BELOW NORMAL WATER LEVEL AND THAT WILL BE MOST FREQUENTLY INUNDATED DURING EVENTS SHOULD BE ESTABLISHED USING PLANT PLUGS.
3. SIDE SLOPES THAT WILL NOT BE FREQUENTLY INUNDATED OR SUBJECT TO SHEET RUNOFF MAY BE ESTABLISHED FROM SEED.
4. SEEDING OF UPLAND AREAS SHOULD OCCUR IN SPRING OR AS A DORMANT FALL PLANTING. SEEDING SHOULD NOT OCCUR MID-SUMMER WHEN TEMPERATURE AND EVAPORATION RATES ARE HIGH UNLESS IRRIGATION WILL BE PROVIDED. PLUGGING OF UPLAND AREAS SHOULD OCCUR BETWEEN APRIL 15-JUNE 15, OR SEPT 1-OCT 15. LIVE WETLAND PLANTS ARE GENERALLY BEST PLANTED IN SUMMER AFTER SEASONALLY HIGH WATER LEVELS HAVE PASSED.
5. INTENSIVE VEGETATION MAINTENANCE SHOULD BE PROVIDED FOR A MINIMUM THREE-YEAR PERIOD UNTIL THE VEGETATION IS WELL ESTABLISHED AND CAN OUTCOMPETE WEEDS. DURING THE ESTABLISHMENT PERIOD, WEEDS SHOULD BE CONTROLLED THROUGH HAND PULLING OR SPOT HERBICIDE APPLICATION. SEEDED PLANTINGS MAY TAKE UP TO FIVE YEARS TO ESTABLISH.
6. ONCE ESTABLISHED, VEGETATION WILL REQUIRE A MINIMUM OF ANNUAL MONITORING AND MAINTENANCE TO CONTROL WEEDS. ANNUAL PRESCRIBED BURNING IS THE PREFERRED METHOD OF MAINTENANCE, BUT ANNUAL MOWING AND WEEDING MAY ALSO BE USED. WEEDING MUST OCCUR PRIOR TO WEED PLANTS SETTING SEED.

OUTLET CONTROL STRUCTURE NOTES

1. OUTLET CONTROL STRUCTURES SHOULD BE DESIGNED TO PREVENT CLOGGING FROM FLOATABLES AND SEDIMENT BURIAL. THIS IS PARTICULARLY IMPORTANT FOR SMALLER DEVELOPMENTS THAT REQUIRE VERY SMALL ORIFICES (<4 INCHES) TO MEET RELEASE RATE REQUIREMENTS.
2. TO PREVENT ORIFICE CLOGGING, IT IS RECOMMENDED THAT THE DISCHARGE PIPE FROM THE BASIN TO THE OUTLET CONTROL STRUCTURE BE LOCATED 6 TO 12 INCHES BELOW THE NORMAL WATER LEVEL TO REDUCE THE AMOUNT OF DEBRIS REACHING THE STRUCTURE. THE STRUCTURE SHOULD ALSO INCLUDE A SUBMERGED LOW FLOW (2-YEAR) ORIFICE TO FURTHER PREVENT DEBRIS BLOCKAGE.

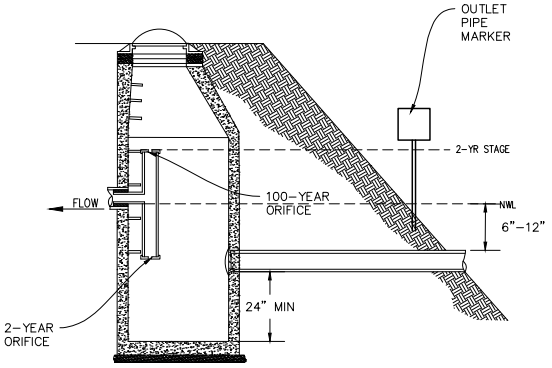

NATURALIZED DETENTION OUTLET CONTROL DETAIL

MAINTENANCE NOTES

1. DETENTION BASIN OUTLET STRUCTURES SHOULD BE INSPECTED FOR CLOGGING AFTER EACH EVENT OVER 0.5 TO 1.0 INCHES DURING THE FIRST YEAR. BASED ON THE EXPERIENCE DURING THE FIRST YEAR, THE FREQUENCY CAN BE REDUCED IN FUTURE YEARS.
2. COMMUNITIES AND/OR PROPERTY OWNER ASSOCIATIONS SHOULD CONDUCT EDUCATION CAMPAIGNS FOR RESIDENTS AND LANDSCAPE CONTRACTORS TO ENSURE THAT DETENTION BASINS AREN'T USED AS DISPOSAL SITES FOR LANDSCAPE WASTE.
3. AN ACCESS ROUTE SHOULD BE PROVIDED FOR EQUIPMENT NECESSARY FOR SEDIMENT REMOVAL.
4. MAINTAINING HEALTHY AND WEED FREE PLANT COMMUNITIES IN THE LOWER PORTIONS OF WET PONDS AND WETLAND BASINS WILL REQUIRE STAFF AND/OR CONTRACTORS DEDICATED TO MANAGING THE BASINS. ADEQUATE FUNDING SOURCES SHOULD BE IDENTIFIED.

GI 4.04
SCALE: NTS

NATURALIZED DETENTION NOTES

A COLLABORATION OF: